SECTION WT
ROAD WHEELS & TIRES

CONTENTS

NOISE, VIBRATION AND HARSHNESS (NVH) TROUBLESHOOTING 2
NVH Troubleshooting Chart 2
ROAD WHEEL 3
Inspection 3
ALUMINUM WHEEL 3
STEEL WHEEL 3
ROAD WHEEL TIRE ASSEMBLY 4
Balancing Wheels (Bonding Weight Type) 4
REMOVAL 4
WHEEL BALANCE ADJUSTMENT 4
Rotation 5
DESCRIPTION 5
LOW TIRE PRESSURE WARNING SYSTEM 7
System Components 7
System Description 7
TRANSMITTER 7
REMOTE KEYLESS ENTRY RECEIVER 7
BCM (BODY CONTROL MODULE) 8
LOW TIRE PRESSURE WARNING LAMP 8
CAN COMMUNICATION 9
System Description 9
TROUBLE DIAGNOSES 10
Wiring Diagram 10
Control Unit Input/Output Signal Standard 12
ID Registration Procedure 14
ID REGISTRATION WITH ACTIVATION TOOL.. 14
ID REGISTRATION WITHOUT CTIVATION TOOL 15
Transmitter Wake Up Operation 16
WITH ACTIVATION TOOL 16
Self-Diagnosis 17
DESCRIPTION 17
FUNCTION 17
LOW TIRE PRESSURE WARNING LAMP DIAGNOSTIC CHART 17
CONSULT-II 18
WORK SUPPORT MODE 19
SELF-DIAGNOSTIC RESULTS MODE 19
DATA MONITOR MODE 20
ACTIVE TEST MODE 21
How to Perform Trouble Diagnosis for Quick and Accurate Repair 23
INTRODUCTION 23
WORK FLOW 23
Preliminary Check 24
Malfunction Code/Symptom Chart 25
TROUBLE DIAGNOSIS FOR SELF-DIAGNOSTIC ITEMS 26
Inspection 1: Transmitter or Control Unit (BCM) 26
MALFUNCTION CODE NO. 21, 22, 23 OR 24 ... 26
Inspection 2: Transmitter - 1 26
MALFUNCTION CODE NO. 31, 32, 33, 34, 41, 42, 43, 44, 45, 46, 47 OR 48 26
Inspection 3: Transmitter - 2 27
MALFUNCTION CODE NO. 35, 36, 37 OR 38 ... 27
Inspection 4: Vehicle Speed Signal 28
MALFUNCTION CODE NO. 52 28
TROUBLE DIAGNOSIS FOR SYMPTOMS 29
Inspection 1: Warning Lamp Does Not Come On When Ignition Switch Is Turned On 29
Inspection 2: Warning Lamp Stays On When Ignition Switch Is Turned On 29
Inspection 3: Warning Lamp Blinks When Ignition Switch Is Turned On 31
Inspection 4: Turn Signal Lamp Blinks When Ignition Switch Is Turned On 32
Inspection 5: ID Registration Can not Be Completed.. 32
REMOVAL AND INSTALLATION 33
Transmitter 33
REMOVAL 33
INSTALLATION 33
SERVICE DATA AND SPECIFICATIONS (SDS) 35
Road Wheel 35
Tire 35

NOISE, VIBRATION AND HARSHNESS (NVH) TROUBLESHOOTING

PFP:00003

NVH Troubleshooting Chart

AES000G1

Use the chart below to help you find the cause of the symptom. If necessary, repair or replace these parts.

Reference page			FAX-4, FSU-8	WT-3	WT-4	WT-35	—	—	—	WT-35	NVH in PR section.	NVH in RFD section.	NVH in FAX and FSU sections.	NVH in RAX and RSU sections.	Refer to TIRES in this chart.	Refer to ROAD WHEEL in this chart.	NVH in RAX section.	NVH in BR section.	NVH in PS section.
Possible cause and SUSPECTED PARTS			Improper installation, looseness	Out-of-round	Imbalance	Incorrect tire pressure	Uneven tire wear	Deformation or damage	Non-uniformity	Incorrect tire size	PROPELLER SHAFT	DIFFERENTIAL	FRONT AXLE AND FRONT SUSPENSION	REAR AXLE AND REAR SUSPENSION	TIRES	ROAD WHEELS	DRIVE SHAFT	BRAKE	STEERING
Symptom	TIRES	Noise	×	×	×	×	×	×	×		×	×	×	×		×	×	×	×
		Shake	×	×	×	×	×	×		×	×		×	×		×	×	×	×
		Vibration				×				×	×		×	×			×		×
		Shimmy	×	×	×	×	×	×	×	×			×	×		×		×	×
		Judder	×	×	×	×	×	×		×			×	×		×		×	×
		Poor quality ride or handling	×	×	×	×	×	×		×			×	×		×			
	ROAD WHEEL	Noise	×	×	×			×			×	×	×	×	×		×	×	×
		Shake	×	×	×			×			×		×	×	×		×	×	×
		Shimmy, Judder	×	×	×			×					×	×	×			×	×
		Poor quality ride or handling	×	×	×			×					×	×	×				

×: Applicable

ROAD WHEEL

PFP:40300

Inspection

AES000G2

ALUMINUM WHEEL

1. Check tires for wear and improper inflation.
2. Check wheels for deformation, cracks and other damage.
   If deformed, remove wheel and check wheel runout.

a. Remove tire from aluminum wheel and mount on a tire balance machine.

b. Set dial indicator as shown in the figure.

Wheel runout (Dial indicator value):

Refer to WT-35, "Road Wheel" .

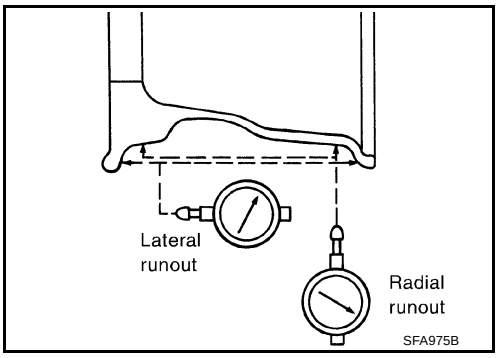

STEEL WHEEL

1. Check tires for wear and improper inflation.
2. Check wheels for deformation, cracks and other damage. If deformed, remove wheel and check wheel runout.

a. Remove tire from steel wheel and mount wheel on a tire balance machine.

b. Set two dial indicators as shown in the figure.

c. Set each dial indicator to 0.

d. Rotate wheel and check dial indicators at several points around the circumference of the wheel.

e. Calculate runout at each point as shown below.

Radial runout = (A+B)/2

Lateral runout = (C+D)/2

f. Select maximum positive runout value and the maximum negative value.
   Add the two values to determine total runout.
   In case a positive or negative value is not available, use the maximum value (negative or positive) for total runout.
   If the total runout value exceeds the limit, replace steel wheel.

Wheel runout : Refer to WT-35, "Road Wheel" .

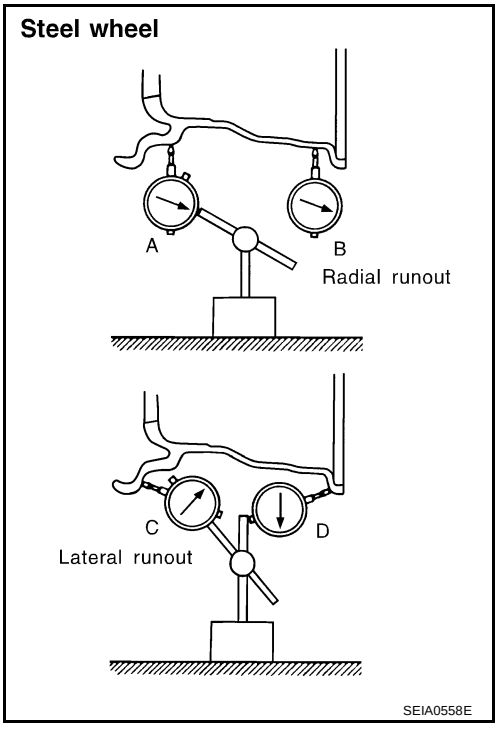

ROAD WHEEL TIRE ASSEMBLY

PFP:40300

Balancing Wheels (Bonding Weight Type)

AES000G3

REMOVAL

1. Remove inner and outer balance weights from the road wheel.

   CAUTION:
   Be careful not to scratch the road wheel during removal.

2. Using releasing agent, remove double-faced adhesive tape from the road wheel.

   CAUTION:
   - **Be careful not to scratch the road wheel during removal.**
   - **After removing double-faced adhesive tape, wipe clean traces of releasing agent from the road wheel.**

WHEEL BALANCE ADJUSTMENT

- If a tire balance machine has adhesion balance weight mode settings and drive-in weight mode setting, select and adjust a drive-in weight mode suitable for road wheels.

1. Set road wheel on wheel balancer using the center hole as a guide. Start the tire balance machine.
2. When inner and outer unbalance values are shown on the wheel balancer indicator, multiply outer unbalance value by 5/3 to determine balance weight that should be used. Select the outer balance weight with a value closest to the calculated value above and install it to the designated outer position of, or at the designated angle in relation to the road wheel.

   CAUTION:
   - **Do not install the inner balance weight before installing the outer balance weight.**
   - **Before installing the balance weight, be sure to clean the mating surface of the road wheel.**

   Indicated unbalance value × 5/3 = balance weight to be installed
   Calculation example:
   23 g (0.81 oz) × 5/3 = 38.33 g (1.35 oz) = 40 g (1.41 oz) balance weight (closer to calculated balance weight value)
   Note that balance weight value must be closer to the calculated balance weight value.
   Example:
   37.4 = 35 g (1.23 oz)
   37.5 = 40 g (1.41 oz)

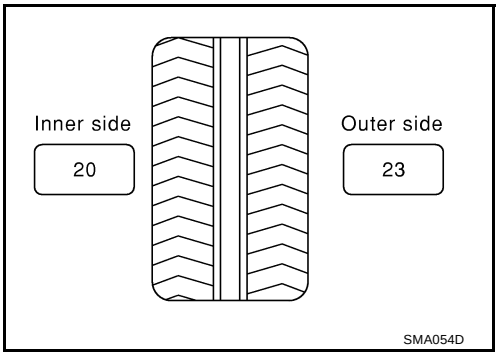

a. Install balance weight in the position shown in the figure.
b. When installing balance weight to road wheels, set it into the grooved area on the inner wall of the road wheel as shown in the figure so that the balance weight center is aligned with the wheel balancer indication position (angle).

   CAUTION:
   - **Always use genuine NISSAN adhesion balance weights.**
   - **Balance weights are unreusable; always replace with new ones.**
   - **Do not install more than three sheets of balance weight.**

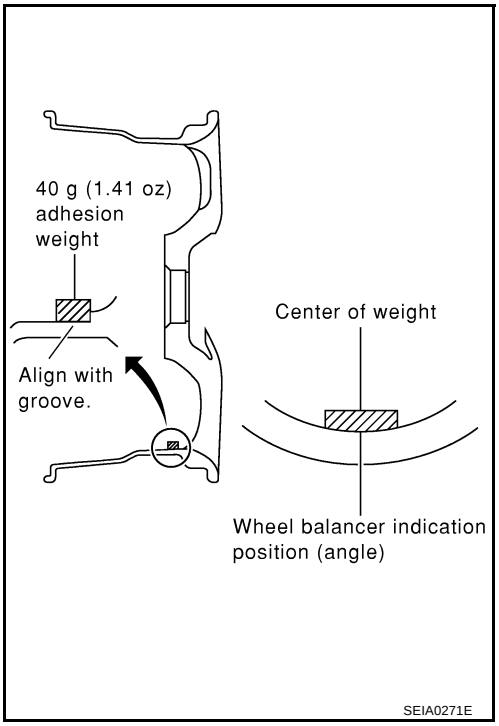

c. If calculated balance weight value exceeds 50 g (1.76 oz), install two balance weight sheets in line with each other as shown in the figure.

CAUTION:
Do not install one balance weight sheet on top of another.

3. Start wheel balancer again.
4. Install drive-in balance weight on inner side of road wheel in the wheel balancer indication position (angle).

CAUTION:
Do not install more than two balance weights.

5. Start wheel balancer. Make sure that inner and outer residual unbalance values are 10 g (0.35 oz) each or below.
   - If either residual unbalance value exceeds 10 g (0.35 oz), repeat installation procedures.

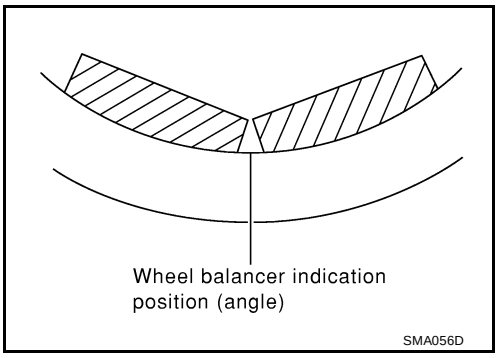

Wheel balance (Maximum allowable unbalance):

Maximum allowable unbalance	Dynamic (At rim flange)	Less than 10 g (0.35 oz) (one side)
	Static (At rim flange)	Less than 20 g (0.70 oz)

Rotation

AES000G4

Tires of this model can not rotate.

CAUTION:
When installing wheels, tighten them diagonally by dividing the work two to three times in order to prevent the wheels from developing any distortion.

Tightening torque of wheel nut:

108 N·m (11 kg-m, 80 ft-lb)

DESCRIPTION

Safety Device Preventing from Being Incorrectly Installed

Front brake disc rotor and front wheel

- Front and rear wheel size for this model differs, therefore a special pin has been installed on the front brake disc rotor. To accommodate this pin a hole has been provided on the front wheel (the rear wheel does not have this hole.) and in some case the rear wheel is being mistakenly installed on the front.

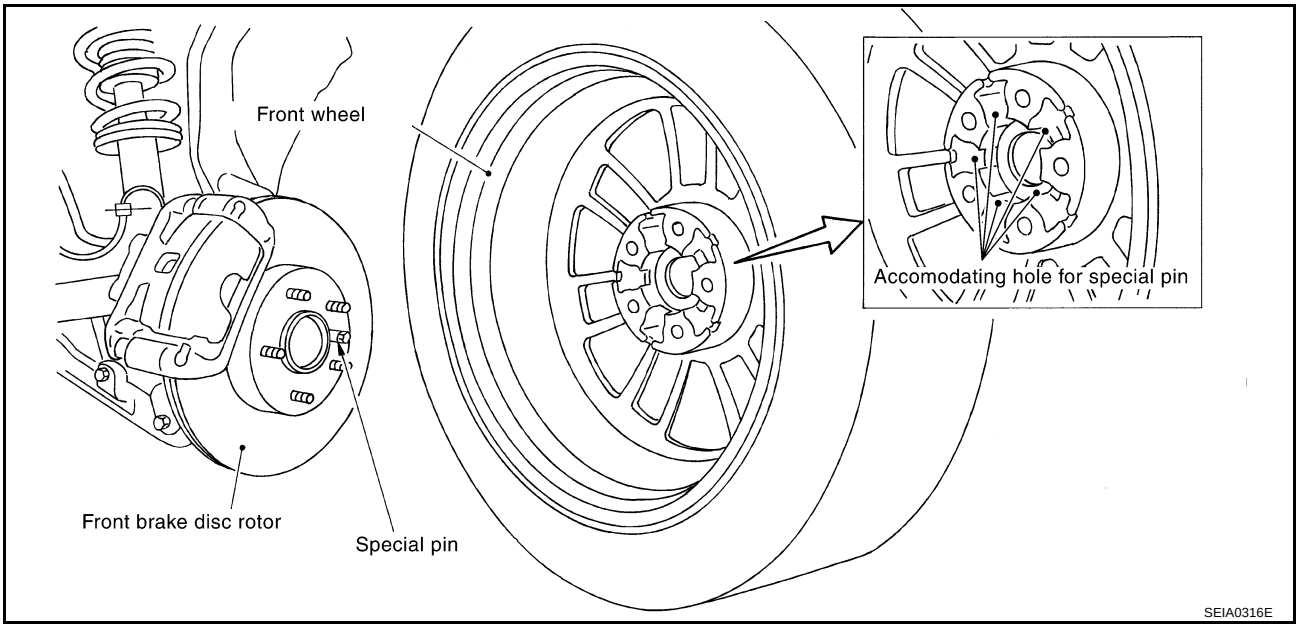

T-type spare tire wheel

- T-type spare tire wheel for this model has a special hole designed to avoid the pin on front disc rotor.

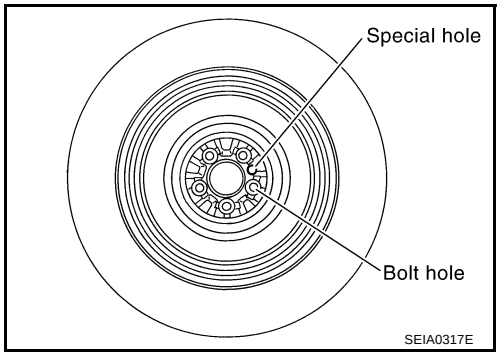

LOW TIRE PRESSURE WARNING SYSTEM

PFP:40300

System Components

AES00107

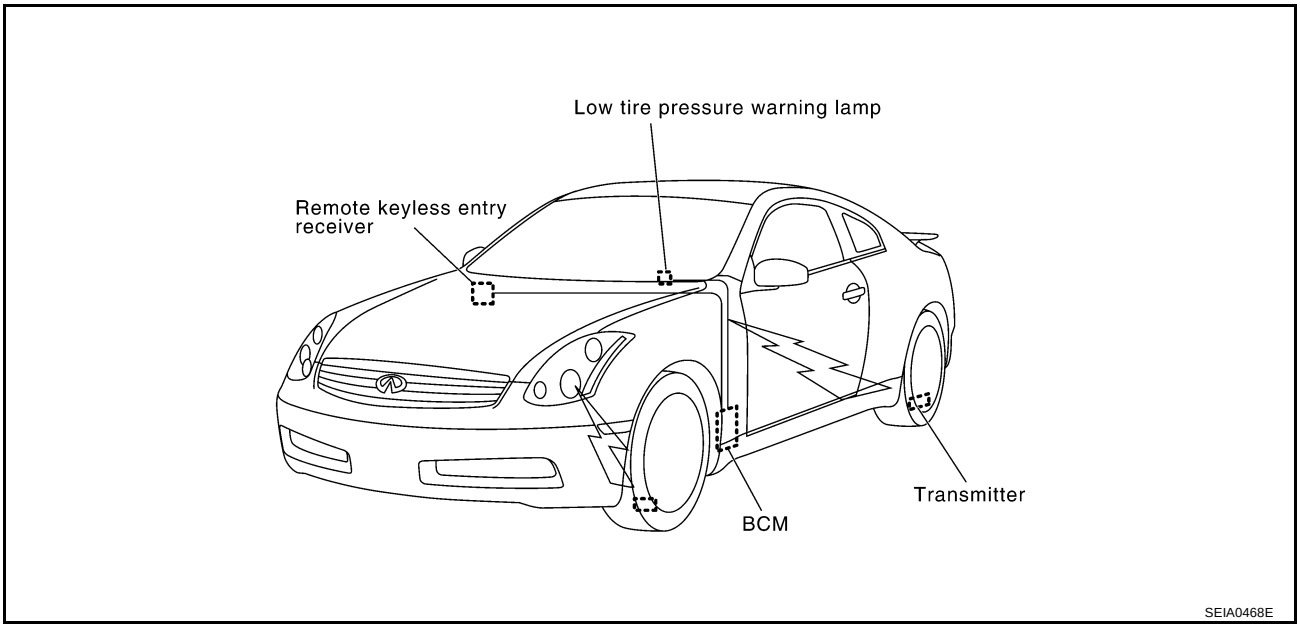

System Description

AES00108

TRANSMITTER

A sensor-transmitter integrated with a valve is installed on a wheel, and transmits a detected air pressure signal in the form of a radio wave.

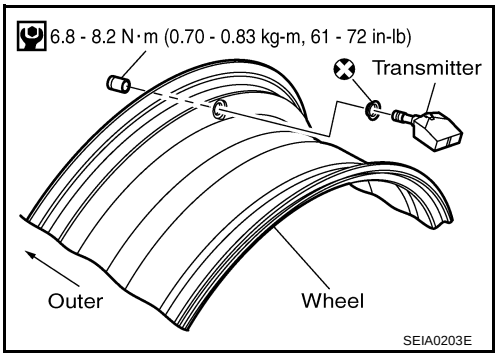

REMOTE KEYLESS ENTRY RECEIVER

The remote keyless entry receiver receives the air pressure signal transmitted by the transmitter in each wheel.

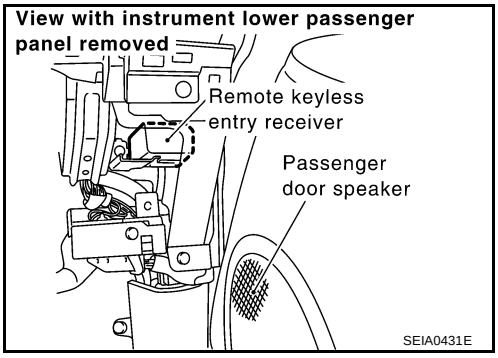

BCM (BODY CONTROL MODULE)

The BCM reads the air pressure signal received by the remote keyless entry receiver, and controls the low tire pressure warning lamp and the buzzer operations as shown below. It also has a judgement function to detect a system malfunction.

Condition	Warning lamp	Buzzer
Less than 171 kPa (1.71 kg/cm^2 , 25 psi) [Flat tire] (Note 1)	ON	Sounds for 10 sec.
Less than 194 kPa (1.94 kg/cm^2 , 28 psi) [Flat tire] (Note 2)		
System malfunction	ON	OFF

Note 1: Standard air pressure is for 210 kpa (2.1 kg/cm^2 , 30 psi) vehicles.

Note 2: Standard air pressure is for 240 kpa (2.4 kg/cm^2 , 35 psi) vehicles.

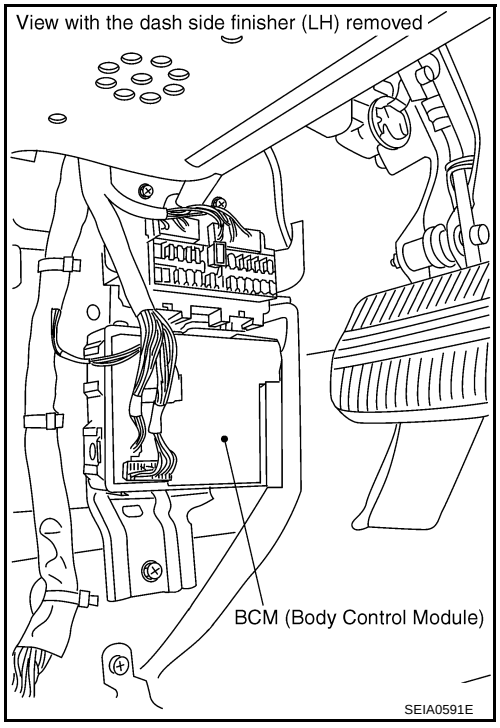

LOW TIRE PRESSURE WARNING LAMP

The combination meter receives tire pressure status from the BCM using CAN communication. When a low tire pressure condition is sensed by the BCM, the combination meter low tire pressure warning lamp and buzzer are activated.

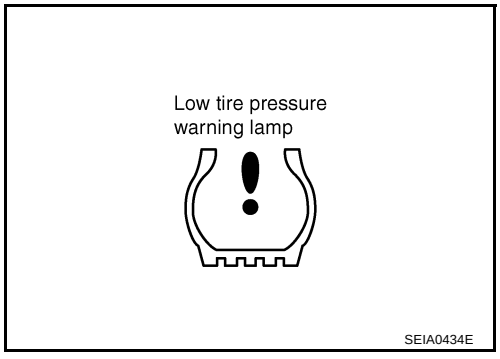

CAN COMMUNICATION

PFP:23710

System Description

AES00109

CAN (Controller Area Network) is a serial communication line for real time application. It is an on-vehicle multiplex communication line with high data communication speed and excellent error detection ability. Many electronic control units are equipped onto a vehicle, and each control unit shares information and links with other control units during operation (not independent). In CAN communication, control units are connected with 2 communication lines (CAN H line, CAN L line) allowing a high rate of information transmission with less wiring. Each control unit transmits/receives data but selectively reads required data only.
Refer to LAN-4, "CAN COMMUNICATION" .

TROUBLE DIAGNOSES

PFP:00004

Wiring Diagram

AES0010B

WT-T/WARN-01

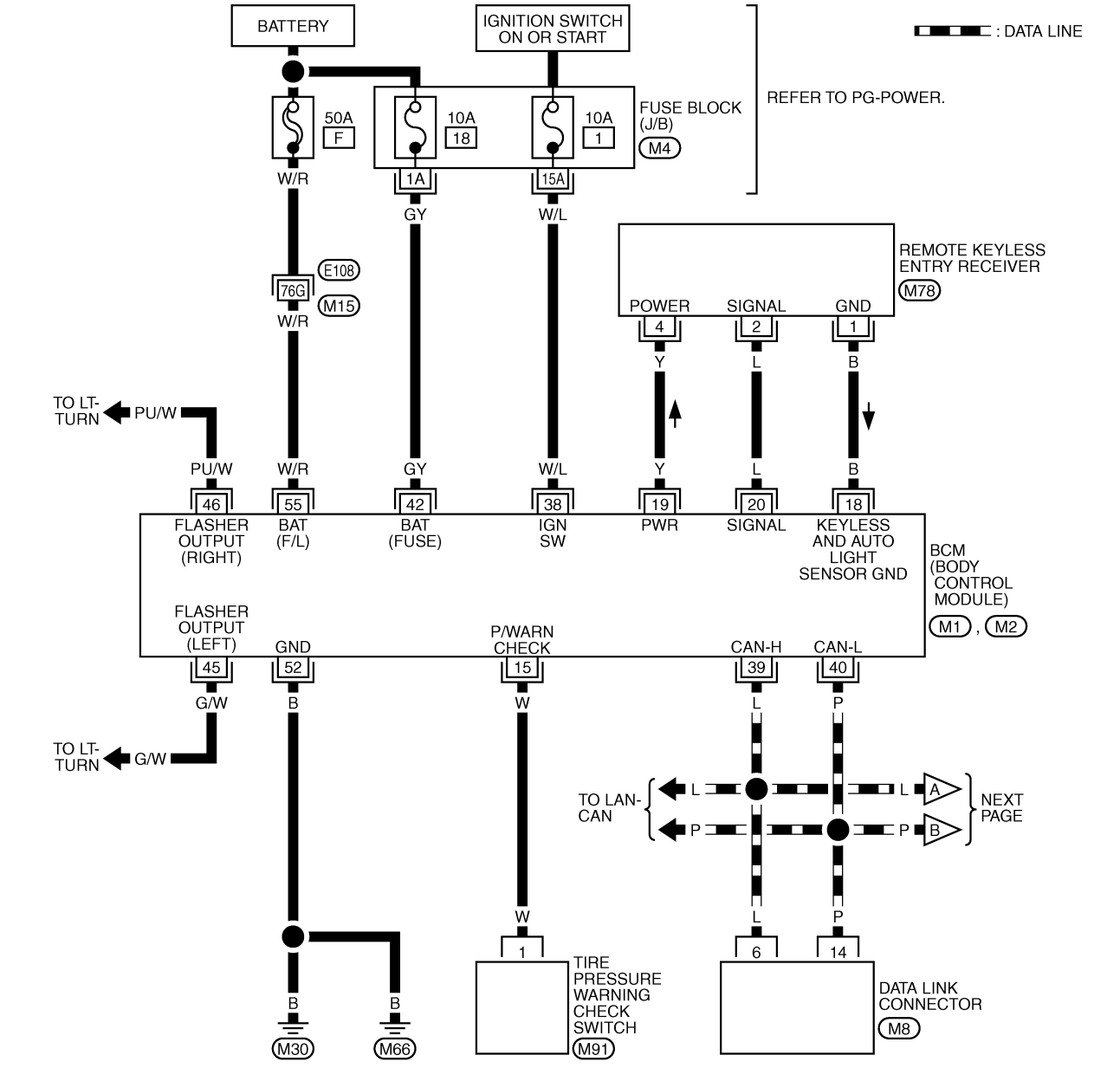

REFER TO THE FOLLOWING.

E108 -SUPER MULTIPLE JUNCTION (SMJ)

M4 -FUSE BLOCK-JUNCTION BOX (J/B)

M1 , M2 -ELECTRICAL UNITS

TEWM0109E

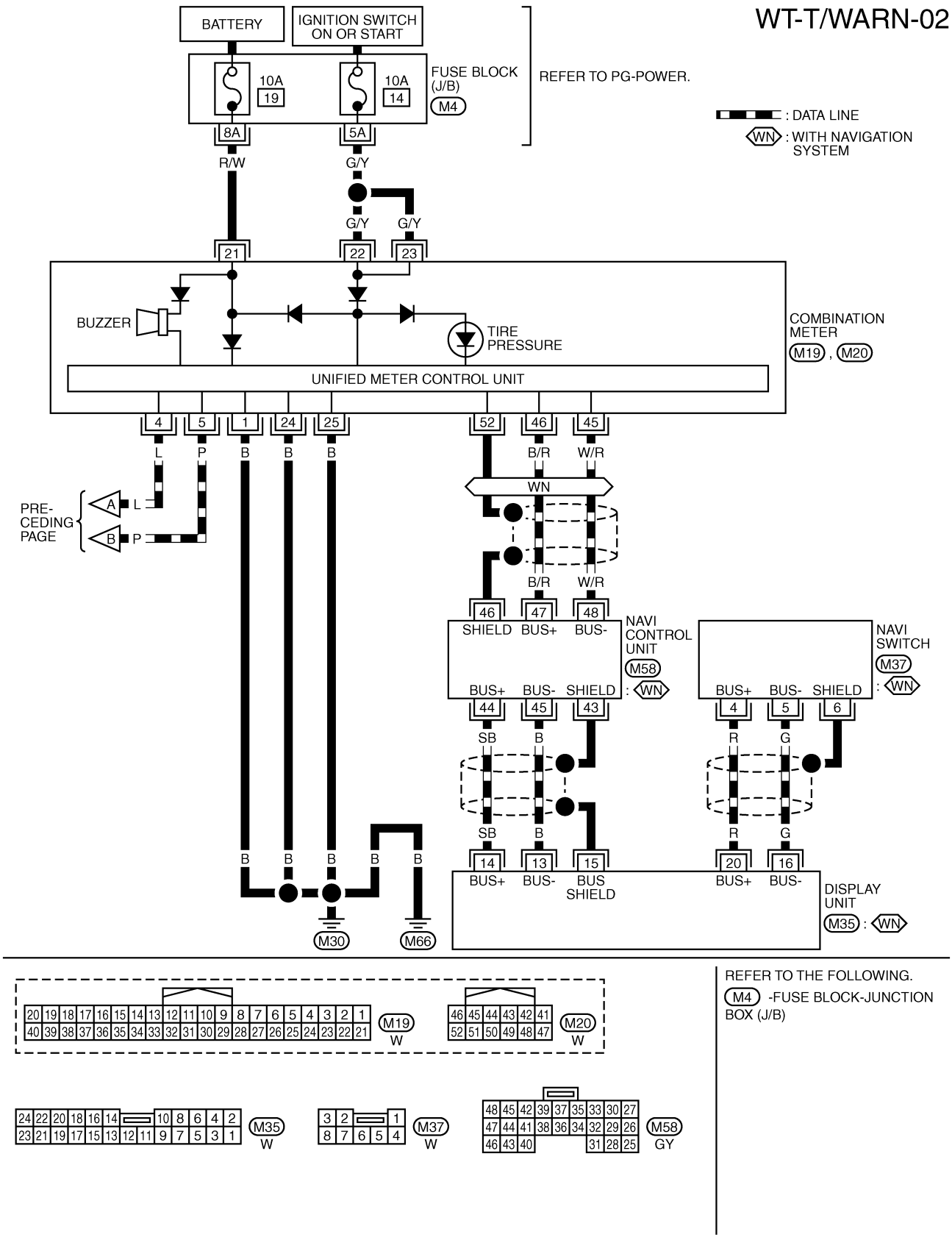
WT-T/WARN-02
BATTERY
IGNITION SWITCH ON OR START
FUSE BLOCK (J/B)
M4
10A 19
10A 14
8A
5A
REFER TO PG-POWER.
: DATA LINE
WN : WITH NAVIGATION SYSTEM
R/W
G/Y
G/Y
G/Y
21
22
23
BUZZER
TIRE PRESSURE
COMBINATION METER
M19 , M20
UNIFIED METER CONTROL UNIT
4
5
1
24
25
52
46
45
L
P
B
B
B
B/R
W/R
WN
PRE-CEDING PAGE
A
L
B
P
B/R
W/R
46
47
48
SHIELD
BUS+
BUS-
NAVI CONTROL UNIT
M58
: WN
NAVI SWITCH
M37
: WN
BUS+
BUS-
SHIELD
44
45
43
4
5
6
SB
B
R
G
SB
B
R
G
B
B
B
B
B
14
13
15
20
16
BUS+
BUS-
BUS SHIELD
BUS+
BUS-
DISPLAY UNIT
M35 : WN
M30
M66
M19
W
M20
W
M35
W
M37
W
M58
GY
REFER TO THE FOLLOWING.
M4 -FUSE BLOCK-JUNCTION BOX (J/B)
TEWM0110E

Control Unit Input/Output Signal Standard

AES0010C

Standards using a circuit tester and oscilloscope

Terminal +	Terminal –	Item	Condition	Voltage (V) Approx. value
15 (W)	Ground	Tire pressure warning check connector	Always	5V
18 (B)		Remote keyless entry receiver (Ground)	—	0V
19 (Y)		Remote keyless entry receiver (Power supply)	Stand-by	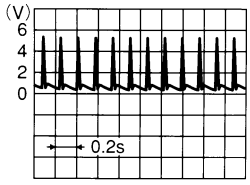 OCC3879D
			Press any of the keyfob switches	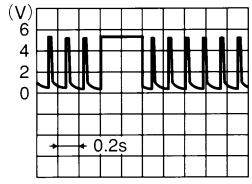 OCC3882D
20 (L)		Remote keyless entry receiver (Signal)	Stand-by	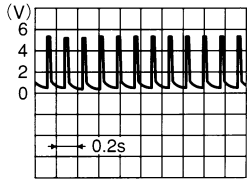 OCC3881D
			Press any of the keyfob switches	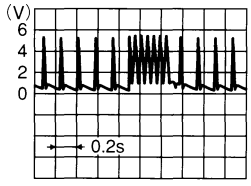 OCC3880D
38 (W/L)		Ignition switch	Ignition switch ON or START	Battery voltage (12V)
39 (L)		Data line (CAN H)	—	—
40 (P)		Data line (CAN L)	—	—
42 (GY)		Battery power supply (Fuse)	Always	Battery voltage (12V)
45 (G/W)		Turn signal (left)	● Ignition switch ON ● Combination switch is turn signal (left) ON	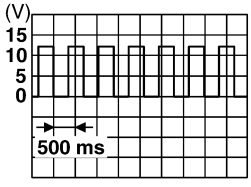 SKIA3009J

Terminal		Item	Condition	Voltage (V) Approx. value
+	–			
46 (PU/W)	Ground	Turn signal (right)	● Ignition switch ON ● Combination switch is turn signal (right) ON	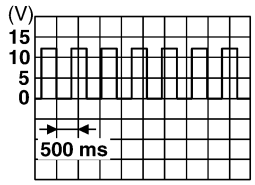 SKIA3009J
52 (B)		Ground	—	0V
55 (W/R)		Battery power supply (F/L)	Always	Battery voltage (12V)

( ): Wire color

ID Registration Procedure

AES0010D

ID REGISTRATION WITH ACTIVATION TOOL

This procedure must be done after replacement of a transmitter or BCM.

CAUTION:

If CONSULT-II is used with no connection of CONSULT-II CONVERTER, malfunction might be detected during self-diagnosis depending on control unit which performs CAN communication.

1. With the ignition switch OFF, connect CONSULT-II and CONSULT-II CONVERTER to the data link connector, then turn the ignition switch ON.
2. Select “START (NISSAN BASED VHCL)”.
3. Select “BCM” on “SELECT SYSTEM” screen.

   NOTE:
   If “BCM” is not indicated, go to GI-38, "CONSULT-II Data Link Connector (DLC) Circuit" .
4. Select “AIR PRESSURE MONITOR” on “SELECT WORK ITEM” screen.
5. Select “WORK SUPPORT” on “SELECT DIAG MODE” screen, and select “ID REGIST”.
6. With the transmitter activation tool (J-45295) pushed against the front-left transmitter position of the tire air valve, press the button then keep 5 seconds.

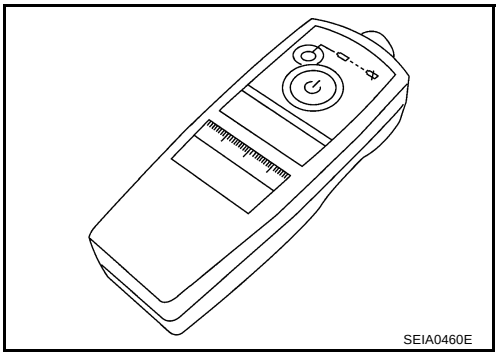

7. Register the IDs in order from FR LH, FR RH, RR RH or RR LH. When ID registration of each wheel has been completed, a buzzer sounds and turn signal lamp (LH/ RH) blinks.

Activation tire position		Buzzer	Turn signal lamp	CONSULT-II
1	Front LH	Once	2 times flashing	“YET” ↓ “DONE”
2	Front RH	2 times		
3	Rear RH	3 times		
4	Rear LH	4 times		

8. After completing all ID registrations, press “END” to complete the procedure.

NOTE:
Be sure to register the IDs in order from FR LH, FR RH, RR RH, to RR LH, or the self-diagnostic results display will not function properly.

ID REGISTRATION WITHOUT CTIVATION TOOL

This procedure must be done after replacement of a transmitter or BCM.

CAUTION:

If CONSULT-II is used with no connection of CONSULT-II CONVERTER, malfunction might be detected during self-diagnosis depending on control unit which performs CAN communication.

1. With the ignition switch OFF, connect CONSULT-II and CONSULT-II CONVERTER to the data link connector, then turn the ignition switch ON.
2. Select “START (NISSAN BASED VHCL)”.
3. Select “BCM” on “SELECT SYSTEM” screen.

   NOTE:
   If “BCM” is not indicated, go to GI-38, "CONSULT-II Data Link Connector (DLC) Circuit" .
4. Select “AIR PRESSURE MONITOR” on “SELECT WORK ITEM” screen.
5. Select “WORK SUPPORT” on “SELECT DIAG MODE” screen, and select “ID REGIST”.
6. Adjust the tire pressure to the values shown in the table below for ID registration, and drive the vehicle at 40 km/h (25 MPH) or more for a few minutes.

Tire position	Tire pressure kPa (kg/cm^2 , psi)
Front – Left	240 (2.4, 34)
Front – Right	220 (2.2, 31)
Rear – Right	200 (2.0, 29)
Rear – Left	180 (1.8, 26)

7. After completing all ID registrations, press “END” to complete the procedure.

Activation tire position	CONSULT-II
Front LH	“YET” ↓ “DONE”
Front RH	
Rear RH	
Rear LH	

8. Inflate all tires to proper pressure. Refer to WT-35, "Tire" .

Transmitter Wake Up Operation

AES0010E

WITH ACTIVATION TOOL

1. With the transmitter activation tool (J-45295) pushed against the front-left transmitter, press the button for 5 seconds.
   - When ignition switch ON, as the low tire pressure warning lamp blinks per the follow diagram, the respective transmitter then must be woken up.

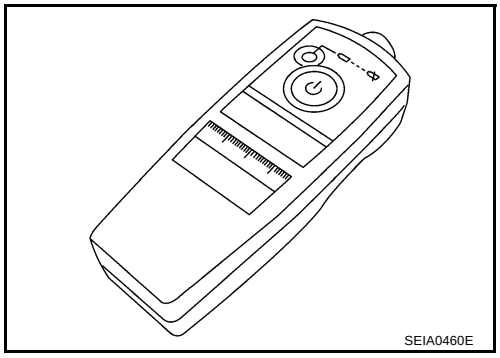

Warning lamp blinking timing		Need to activation tire position
ON / OFF: a, b	a : 0.3sec b : 1.3sec	Front LH
ON / OFF: a, a, a, b	a : 0.3sec b : 1.3sec	Front RH
ON / OFF: a, a, a, a, a, b	a : 0.3sec b : 1.3sec	Rear RH
ON / OFF: a, a, a, a, a, a, a, b	a : 0.3sec b : 1.3sec	Rear LH
ON / OFF: a, b	a : 2sec b : 0.2sec	All tire

SEIA0378E

2. Register the ID of wheel that warning lamp flashes. When wake up of registered wheel has been completed, turn signal lamp flashes two times.
3. After completing wake up all transmitters, make sure low tire pressure warning lamp goes out.

Self-Diagnosis

AES0010F

DESCRIPTION

During driving, the low tire pressure warning system receives the signal transmitted from the transmitter installed in each wheel, and gives alarms when the tire pressure becomes low. The control unit (BCM) of this system has pressure judgement and trouble diagnosis functions.

FUNCTION

When the low tire pressure warning system detects low inflation pressure or another unusual symptom, the warning lamps in the combination meter comes on. To start the self-diagnostic results mode, ground terminal of the tire pressure warning check connector. The malfunction location is indicated by the warning lamp flashing and the buzzer sounds.

LOW TIRE PRESSURE WARNING LAMP DIAGNOSTIC CHART

Diagnosis Item	Symptom (Ignition switch ON)	Low tire pressure warning lamp	Cause	Action
Low tire pressure warning lamp	Warning light comes on immediately and turns off after 1 second.	ON 1 sec > stays OFF SEIA0592E	All wheel transmitters are “activated” (working).	None (system OK)
	Warning light blinks on for 2 seconds, then turns off for 0.2 seconds-repeats.	Blinks: ON 2 sec > OFF 0.2 sec SEIA0593E	All wheel transmitters are not activated.	Activate all wheel transmitters. Refer to WT-16, "Transmitter Wake Up Operation" .
	Warning light blinks 1 time.	Blinks 1 time ON 0.3 sec > OFF 1.3 sec SEIA0594E	Front LH wheel transmitter is not activated.	Activate front LH wheel transmitter. Refer to WT-16, "Transmitter Wake Up Operation" .
	Warning light blinks 2 times.	Blinks 2 times ON 0.3 sec > OFF 0.3 sec SEIA0595E	Front RH wheel transmitter is not activated.	Activate front RH wheel transmitter. Refer to WT-16, "Transmitter Wake Up Operation" .
	Warning light blinks 3 times.	Blinks 3 times ON 0.3 sec > OFF 0.3 sec SEIA0596E	Rear RH wheel transmitter is not activated.	Activate rear RH wheel transmitter. Refer to WT-16, "Transmitter Wake Up Operation" .

Diagnosis Item	Symptom (Ignition switch ON)	Low tire pressure warning lamp	Cause	Action
Low tire pressure warning lamp	Warning light blinks 4 times.	 Blinks 4 times ON 0.3 sec > OFF 0.3 sec SEIA0597E	Rear LH wheel transmitter is not activated.	Activate rear LH wheel transmitter. Refer to WT-16, "Transmitter Wake Up Operation" .
	Warning light comes on and does not turn off.	 Comes ON and stays ON SEIA0598E	The fuse for combination meter from battery is pulled out.	Check the fuse for combination meter from battery. Install or replace (if needed).
			BCM connector pulled out.	Check BCM connector. Re-connect if needed.
			Low tire pressure or low tire pressure warning system malfunction.	● Perform CONSULT-II Self-Diagnosis. Refer to WT-17, "Self-Diagnosis" . – Perform ID Registration if needed. Refer to WT-14, "ID Registration Procedure" .
Turn signal lamp	Turn signal lamp does not flash 2 times or horn does not sound after transmitter activation.		1. Tool J-45295 (SST) battery low. 2. Ignition OFF during activation. 3. Tool J-45295 (SST) not positioned correctly. 4. Transmitters already activated.	1. Install new battery. 2. Make sure ignition is ON during activation. 3. Position tool correctly during activation. 4. None

NOTE:
If more than one wheel transmitter is NOT activated, the warning lamp blinking patterns for those wheels will combine. (Example: one blink/OFF/three blinks = Rear LH and Rear RH transmitters are not activated.)

CONSULT-II

CONSULT-II Main Function

In a diagnosis function (main function), there are “WORK SUPPORT”, “SELF-DIAGNOSTIC RESULTS”, “DATA MONITOR”, “ACTIVE TEST”.

Diagnostic test mode	Function	Reference
WORK SUPPORT	This mode enables a technician to adjust some devices faster and more accurately by following the indications on CONSULT-II.	WT-19, "WORK SUPPORT MODE".
SELF-DIAGNOSTIC RESULTS	Self-diagnostic results can be read and erased quickly.	WT-19, "SELF-DIAGNOSTIC RESULTS MODE".
DATA MONITOR	Input/Output data in the control unit can be read.	WT-20, "DATA MONITOR MODE".
ACTIVE TEST	Diagnostic Test Mode in with CONSULT-II drives some actuators apart from the control unit (BCM) and also shifts some parameters in a specified range.	WT-21, "ACTIVE TEST MODE".

WORK SUPPORT MODE

Operation Procedure

1. Touch necessary test item.
2. The “Work support” screen will be displayed, so perform the following test.

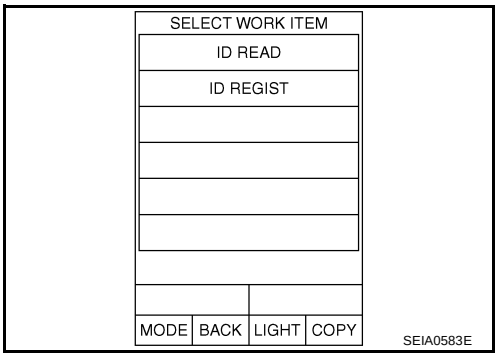

Test Item

- ID Read
- ID Regist

ID Read

The registered ID number is displayed.

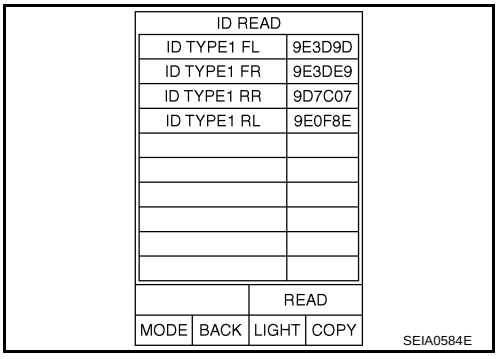

ID Regist

Refer to WT-14, "ID Registration Procedure" .

SELF-DIAGNOSTIC RESULTS MODE

Diagnostic item	Diagnostic item is detected when …
FLAT - TIRE - FL FLAT - TIRE - FR FLAT - TIRE - RR FLAT - TIRE - RL	Front-left tire pressure drops to * kPa (* kg/cm^2 , * psi) or less. (Notice) Front-right tire pressure drops to * kPa (* kg/cm^2 , * psi) or less. (Notice) Rear-right tire pressure drops to * kPa (* kg/cm^2 , * psi) or less. (Notice) Rear-left tire pressure drops to * kPa (* kg/cm^2 , * psi) or less. (Notice)
[NO-DATA] - FL [NO-DATA] - FR [NO-DATA] - RR [NO-DATA] - RL	Data from front-left transmitter cannot be received. Data from front-right transmitter cannot be received. Data from rear-right transmitter cannot be received. Data from rear-left transmitter cannot be received.
[CHECKSUM- ERR] - FL [CHECKSUM- ERR] - FR [CHECKSUM- ERR] - RR [CHECKSUM- ERR] - RL	Checksum data from front-left transmitter is malfunctioning. Checksum data from front-right transmitter is malfunctioning. Checksum data from rear-right transmitter is malfunctioning. Checksum data from rear-left transmitter is malfunctioning.
[PRESS DATA- ERR] - FL [PRESS DATA- ERR] - FR [PRESS DATA- ERR] - RR [PRESS DATA- ERR] - RL	Air pressure data from front-left transmitter is malfunctioning. Air pressure data from front-right transmitter is malfunctioning. Air pressure data from rear-right transmitter is malfunctioning. Air pressure data from rear-left transmitter is malfunctioning.
[CODE- ERR] - FL [CODE- ERR] - FR [CODE- ERR] - RR [CODE- ERR] - RL	Function code data from front-left transmitter is malfunctioning. Function code data from front-right transmitter is malfunctioning. Function code data from rear-right transmitter is malfunctioning. Function code data from rear-left transmitter is malfunctioning.

Diagnostic item	Diagnostic item is detected when …
[BATT - VOLT - LOW] - FL [BATT - VOLT - LOW] - FR [BATT - VOLT - LOW] - RR [BATT - VOLT - LOW] - RL	Battery voltage of front-left transmitter drops. Battery voltage of front-right transmitter drops. Battery voltage of rear-right transmitter drops. Battery voltage of rear-left transmitter drops.
VHCL_SPEED_SIG_ERR	Vehicle speed signal is error.

NOTE:
Before performing the self-diagnosis, be sure to register the ID, or else the actual malfunction location may be different from that displayed on CONSULT-II.

NOTICE:

- 171 kPa (1.71 kg/cm^2 , 25 psi) : Standard air pressure is for 210 kpa (2.1 kg/cm^2 , 30 psi) vehicles.
- 194 kPa (1.94 kg/cm^2 , 28 psi) : Standard air pressure is for 240 kpa (2.4 kg/cm^2 , 35 psi) vehicles.

DATA MONITOR MODE

MONITOR	CONDITION	SPECIFICATION
VEHICLE SPEED	Drive vehicle.	Vehicle speed (km/h or MPH)
AIR PRESS FL AIR PRESS FR AIR PRESS RR AIR PRESS RL	● Drive vehicle for a few minutes. or ● Ignition switch ON and activation tool is transmitting activation signals.	Tire pressure (kPa or Psi)
ID REGST FL 1 ID REGST FR 1 ID REGST RR 1 ID REGST RL 1	Ignition switch ON	Registration ID: DONE No registration ID: YET
WARNING LAMP		Low tire pressure warning lamp on: ON Low tire pressure warning lamp off: OFF
BUZZER		Buzzer in combination meter on: ON Buzzer in combination meter off: OFF

NOTE:
Before performing the self-diagnosis, be sure to register the ID, or else the actual malfunction location may be different from that displayed on CONSULT-II.

ACTIVE TEST MODE

NOTE:
Before performing the self-diagnosis, be sure to register the ID, or else the actual malfunction location may be different from that displayed on CONSULT-II.

Operation Procedure

1. Touch necessary test item.
2. The “Active Test” screen will be displayed, so perform the following test.

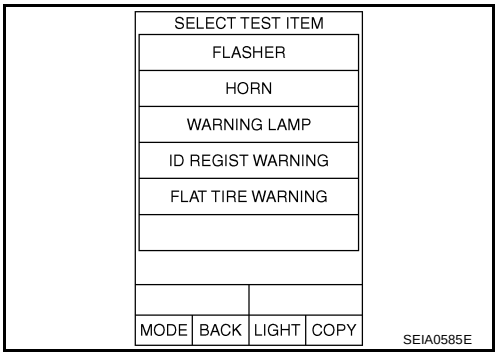

Test Item

- Flasher
- Horn
- Warning lamp
- ID regist warning
- Flat tire warning

Flasher

Touch “LH”and “RH” on the display, and then check to make sure that each turn signal lamp turns on.

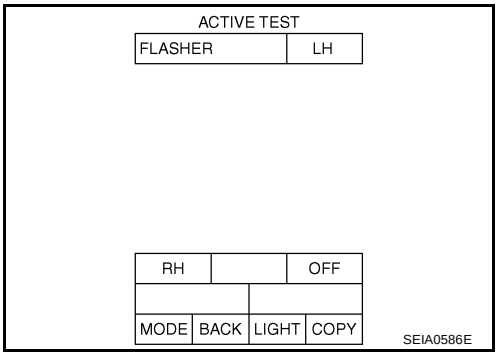

Horn

Touch “LH” “RH” on the display, and then check to make sure that the horn sounds.

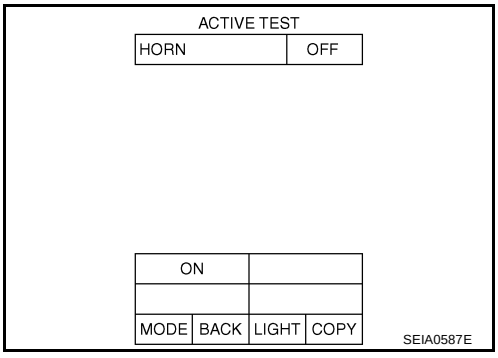

Warning lamp

Touch “LH” “RH” on the display, and then check to make sure that the warning lamp turns on.

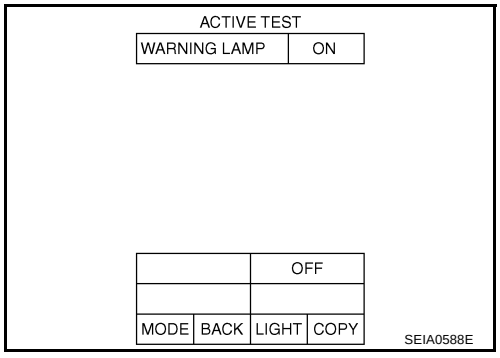

ID regist warning

Touch “LH” “RH” on the display, and then check to make sure that the buzzer sounds or the warning lamp turns on.

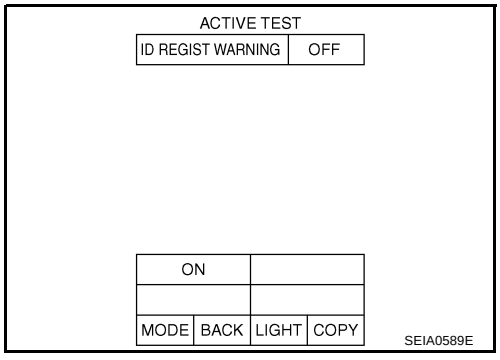

Flat tire warning

Touch “LH” “RH” on the display, and then check to make sure that the buzzer sounds or the warning lamp turns on.

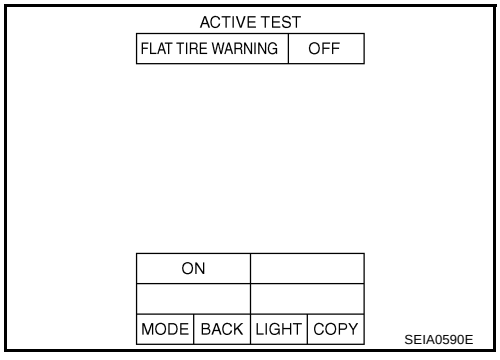

How to Perform Trouble Diagnosis for Quick and Accurate Repair

AES0010T

INTRODUCTION

- Before troubleshooting, verify customer complaints.
- If a vehicle malfunction is difficult to reproduce, harnesses, harness connectors or terminals may be malfunctioning. Hold and shake these parts to make sure they are securely connected.
- When using a circuit tester to measure voltage or resistance of each circuit, be careful not to damage or deform connector terminals.

WORK FLOW

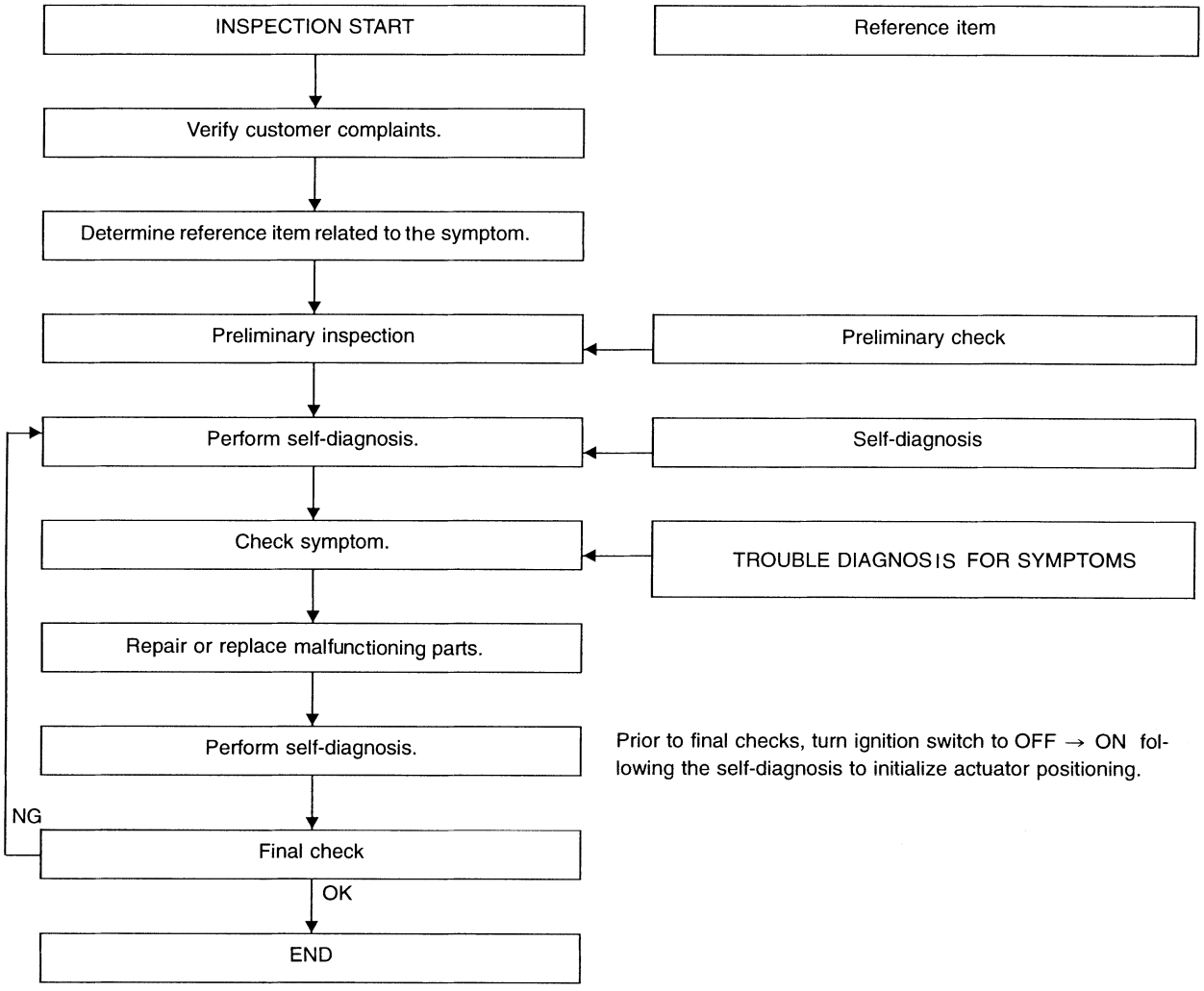

SEIA0100E

Preliminary check: WT-24 Self-diagnosis: WT-17 Trouble diagnosis for symptoms: WT-29

Preliminary Check

AES0010U

BASIC INSPECTION

1. CHECK ALL TIRE PRESSURES

- Check all tire pressures. Refer to WT-35, "Tire" .

OK or NG

OK >> GO TO 2.
NG >> Adjust tire pressure to specified value.

2. CHECK LOW TIRE PRESSURE WARNING LAMP ACTIVATION

1. Check low tire pressure warning lamp activation.
2. Does low tire pressure warning lamp activate for 1 second when ignition switch is turned “ON”?

Does warning lamp activate?

YES >> GO TO 3.
NO >> Check fuse and combination meter.

3. CHECK CONNECTOR

1. Disconnect BCM harness connectors M1 and M2.
2. Check terminals for damage or loose connection.

OK or NG

OK >> GO TO 4.
NG >> Repair or replace damaged parts.

4. CHECK ACTIVATION TOOL

- Check transmitter activation tool battery.

OK or NG

OK >> Perform self-diagnosis.
NG >> Replace transmitter activation tool battery.

Malfunction Code/Symptom Chart

AES0010V

Code/Symptom	Malfunction part	Reference page
15 16 17 18	Front-left tire pressure drops to * kPa (* kg/cm^2 , * psi) or less. (Notice) Front-right tire pressure drops to * kPa (* kg/cm^2 , * psi) or less. (Notice) Rear-right tire pressure drops to * kPa (* kg/cm^2 , * psi) or less. (Notice) Rear-left tire pressure drops to * kPa (* kg/cm^2 , * psi) or less. (Notice)	—
21 22 23 24	Transmitter no data (front - left) Transmitter no data (front - right) Transmitter no data (rear - right) Transmitter no data (rear - left)	WT-26
31 32 33 34	Transmitter checksum error (front - left) Transmitter checksum error (front - right) Transmitter checksum error (rear - right) Transmitter checksum error (rear - left)	WT-26
35 36 37 38	Transmitter pressure data error (front - left) Transmitter pressure data error (front - right) Transmitter pressure data error (rear - right) Transmitter pressure data error (rear - left)	WT-27
41 42 43 44	Transmitter function code error (front - left) Transmitter function code error (front - right) Transmitter function code error (rear - right) Transmitter function code error (rear - left)	WT-26
45 46 47 48	Transmitter battery voltage low (front - left) Transmitter battery voltage low (front - right) Transmitter battery voltage low (rear - right) Transmitter battery voltage low (rear - left)	WT-26
52	Vehicle speed signal	WT-28
Warning lamp does not come on when ignition switch is turned on.	Fuse or combination meter BCM connector or circuit BCM	WT-29
Warning lamp stays on when ignition switch is turned on.	Combination meter BCM connector or circuit BCM	WT-29
Warning lamp blinks when ignition switch is turned on.	BCM connector or circuit BCM Transmitter's mode off ID registration not yet	WT-31
Turn signal lamp blinks when ignition switch is turned on.	BCM connector or circuit BCM	WT-32
ID registration can not be operated.	Transmitter Remote keyless entry receiver connector or circuit Remote keyless entry receiver BCM connector or circuit BCM	WT-32

NOTICE:

- 171 kPa (1.71 kg/cm^2 , 25 psi) : Standard air pressure is for 210 kpa (2.1 kg/cm^2 , 30 psi) vehicles.
- 194 kPa (1.94 kg/cm^2 , 28 psi) : Standard air pressure is for 240 kpa (2.4 kg/cm^2 , 35 psi) vehicles.

TROUBLE DIAGNOSIS FOR SELF-DIAGNOSTIC ITEMS

PFP:00000

Inspection 1: Transmitter or Control Unit (BCM)

AES0010J

MALFUNCTION CODE NO. 21, 22, 23 OR 24

1. CHECK CONTROL UNIT

- Drive for several minutes. Check all tire pressures with CONSULT-II “DATA MONITOR ITEM”.

Are all tire pressures displayed 0 kPa?

YES >> GO TO 2.
NO >> GO TO 3.

2. CHECK REMOTE KEYLESS ENTRY RECEIVER CONNECTOR

1. Disconnect remote keyless entry receiver harness connector M78.
2. Check terminals for damage or loose connection.
3. Reconnect harness connector.

OK or NG

OK >> Replace BCM refer to BCS-15, "Removal and Installation of BCM" , then GO TO 3.
NG >> Repair or replace remote keyless entry receiver harness connector.

3. ID REGISTRATION

- Perform ID registration of all transmitters.

Are there any tires that ID can not be registered to?

YES >> Replace transmitter of the tire, then GO TO 5.
NO >> GO TO 4.

4. VEHICLE DRIVING

- Drive at a speed of 40 km/h (25 MPH) or more for several minutes without stopping.
  Check all tire pressures with CONSULT-II “DATA MONITOR ITEM” within 15 minutes after vehicle speed becomes 17 km/h (11 MPH).

Does “DATA MONITOR ITEM” display tire pressure as normal without any warning lamp?

YES >> INSPECTION END
NO >> GO TO 5.

5. ID REGISTRATION AND VEHICLE DRIVING

1. Perform ID registration of all transmitters.
2. Drive at a speed of 40 km/h (25 MPH) or more for 3 minutes, and then drive the vehicle at any speed for 10 minutes. Then check all tire pressures with CONSULT-II “DATA MONITOR ITEM” within 5 minutes.

Does “DATA MONITOR ITEM” display tire pressure as normal without any warning lamp?

YES >> INSPECTION END
NO >> GO TO the inspection applicable to DTC.

Inspection 2: Transmitter - 1

AES0010K

MALFUNCTION CODE NO. 31, 32, 33, 34, 41, 42, 43, 44, 45, 46, 47 OR 48

1. ID REGISTRATION (CORRECTION OF TRANSMITTER LOCATION)

1. Perform ID registration of all transmitters.
2. Drive at a speed of 40 km/h (25 MPH) or more for 3 minutes, and then drive the vehicle at any speed for 10 minutes.

>> GO TO 2.

2. REPLACE TRANSMITTER

1. Check low tire pressure warning condition again, and replace malfunctioning transmitter.
2. Perform ID registration of all transmitter.

Can ID registration of all transmitters be completed?

YES >> GO TO 3.
NO >> GO TO the inspection 1. Refer to WT-26, "Inspection 1: Transmitter or Control Unit (BCM)" .

3. VEHICLE DRIVING

- Drive at a speed of 40 km/h (25 MPH) or more for 3 minutes, and then drive the vehicle at any speed for 10 minutes. Then check all tire pressures with CONSULT-II “DATA MONITOR ITEM” within 5 minutes.

Does “DATA MONITOR ITEM” display tire pressure as normal without any warning lamp?

YES >> INSPECTION END
NO >> Replace malfunctioning transmitter, and perform “Step 3” again.

Inspection 3: Transmitter - 2

AES0010L

MALFUNCTION CODE NO. 35, 36, 37 OR 38

1. CHECK ALL TIRE PRESSURES

- Check all tire pressures. Refer to WT-35, "Tire" .

Are there any tires whose pressure is “64 psi” or more?

YES >> Adjust tire pressure to specified value.
NO >> GO TO 2.

2. VEHICLE DRIVING

1. Perform ID registration of all transmitters.
2. Drive at a speed of 40 km/h (25 MPH) or more for several minutes without stopping.
   Check all tire pressures with CONSULT-II “DATA MONITOR ITEM” within 15 minutes after vehicle speed becomes 17 km/h (11 MPH).

>> Replace transmitter with new one if “DATA MONITOR ITEM” display 64 psi or more. Then GO TO 3.

3. ID REGISTRATION AND VEHICLE DRIVING

1. Perform ID registration of all transmitters.
2. Drive at a speed of 40 km/h (25 MPH) or more for 3 minutes, and then drive the vehicle at any speed for 10 minutes. Then check all tire pressures with CONSULT-II “DATA MONITOR ITEM” within 5 minutes.

Does “DATA MONITOR ITEM” display tire pressure as normal without any warning lamp?

YES >> INSPECTION END
NO >> GO TO the inspection applicable to DTC.

Inspection 4: Vehicle Speed Signal

AES0010M

MALFUNCTION CODE NO. 52

1. CHECK SELF-DIAGNOSTIC RESULTS

1. With the ignition switch OFF, connect CONSULT-II and CONSULT-II CONVERTER to the data link connector, then turn the ignition switch ON.
2. Select “START (NISSAN BASED VHCL)”.
3. Select “BCM” on “SELECT SYSTEM” screen.

   NOTE:
   If “BCM” is not indicated, go to GI-38, "CONSULT-II Data Link Connector (DLC) Circuit" .
4. Select “BCM C/U” on “SELECT SYSTEM” screen.
5. Select “SELF-DIAG RESULTS” on “SELECT DIAG MODE” screen.
6. Check display contents in self-diagnostic results.

Is “CAN COMM CIRCUIT” displayed in the self-diagnosis display items?

YES >> Malfunction in CAN communication system. GO TO LAN-2, "Precautions When Using CONSULT-II" .

NO >> No malfunction. Check combination meter refer to DI-13, "Vehicle Speed Signal Inspection" .

TROUBLE DIAGNOSIS FOR SYMPTOMS

PFP:00007

Inspection 1: Warning Lamp Does Not Come On When Ignition Switch Is Turned On

AES0010N

DIAGNOSTIC PROCEDURE

1. CHECK SELF-DIAGNOSTIC RESULTS

1. With the ignition switch OFF, connect CONSULT-II and CONSULT-II CONVERTER to the data link connector, then turn the ignition switch ON.
2. Select “START (NISSAN BASED VHCL)”.
3. Select “BCM” on “SELECT SYSTEM” screen.

   NOTE:
   If the “BCM” is not indicated, go to GI-38, "CONSULT-II Data Link Connector (DLC) Circuit" .
4. Select “BCM C/U” on “SELECT WORK ITEM” screen, and select “SELF-DIAG RESULTS”.
5. Select “SELF-DIAG RESULTS” on “SELECT DIAG MODE” screen.
6. Check display contents in self-diagnostic results.

Is “CAN COMM CIRCUIT” displayed in the self-diagnosis display items?

YES >> Malfunction in CAN communication system. GO TO LAN-2, "Precautions When Using CONSULT-II" .

NO >> No malfunction. GO TO 2.

2. CHECK COMBINATION METER

- Check combination meter function.

OK or NG

OK >> GO TO 3.

NG >> Check combination meter. Refer to DI-4, "System Description" .

3. CHECK LOW TIRE PRESSURE WARNING LAMP

- Disconnect BCM harness connectors M1 and M2.

Does the warning lamp activate?

YES >> Replace BCM. Refer to BCS-15, "Removal and Installation of BCM" .

NO >> Check combination meter and repair or replace.

Inspection 2: Warning Lamp Stays On When Ignition Switch Is Turned On

AES0010O

DIAGNOSTIC PROCEDURE

1. CHECK CONNECTOR

1. Disconnect BCM harness connectors M1 and M2.
2. Check terminals for damage or loose connections.

OK or NG

OK >> GO TO 2.

NG >> Repair or replace damaged parts.

2. CHECK POWER SUPPLY CIRCUIT (BATTERY)

Measure voltage between BCM harness connector M2 terminals 42 (GY), 55 (R) and ground.

Terminal			Voltage
(+)		(–)	
Connector	Terminal (Wire color)	Ground	12V
M2	42 (GY), 55 (W/R)		

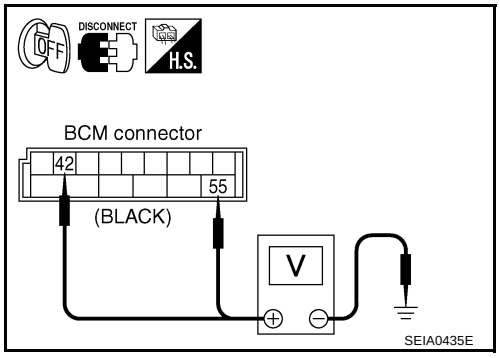

OK or NG

OK >> GO TO 3.
NG >> Check BCM power supply circuit for open or short.

3. CHECK POWER SUPPLY CIRCUIT (IGN)

1. Turn ignition switch ON.
2. Measure voltage between BCM harness connector M1 terminal 38 (W/L) and ground.

Terminal			Voltage
(+)		(–)	
Connector	Terminal (Wire color)	Ground	12V
M1	38 (W/L)		

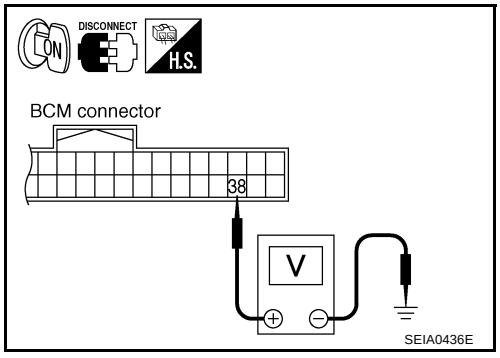

OK or NG

OK >> GO TO 4.
NG >> Check BCM power supply circuit for open or short.

4. CHECK GROUND CIRCUIT

- Check continuity between BCM harness connector M2 terminal 52 (B) and ground.

Terminal			Continuity
(+)		(–)	
Connector	Terminal (Wire color)	Ground	Should exist.
M2	52 (B)		

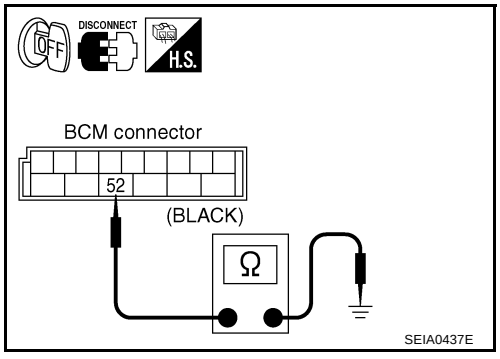

OK or NG

OK >> Replace BCM. Refer to BCS-15, "Removal and Installation of BCM" .
NG >> Repair or replace BCM ground circuit.

Inspection 3: Warning Lamp Blinks When Ignition Switch Is Turned On

AES0010P

NOTE:
If warning lamp blinks below, the system is normal.

Blink Mode A

- This mode shows transmitter status is OFF-mode.
  Perform transmitter wake up operation. Refer to WT-16, "Transmitter Wake Up Operation" .

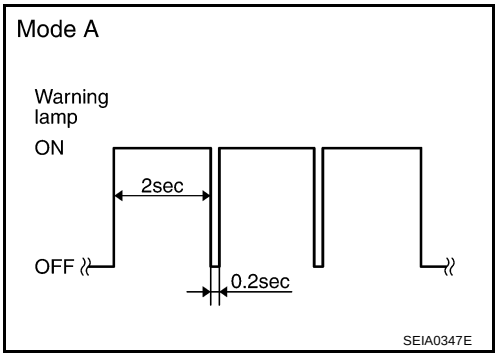

DIAGNOSTIC PROCEDURE

1. CHECK CONNECTOR

1. Disconnect BCM harness connector M1.
2. Check terminals for damage or loose connections.

OK or NG

OK >> GO TO 2.
NG >> Repair or replace damaged parts.

2. CHECK TIRE PRESSURE WARNING CHECK SWITCH CIRCUIT

- Check continuity between BCM harness connector M1 terminal 15 (G) and ground.

Terminal			Continuity
(+)		(–)	
Connector	Terminal (Wire color)	Ground	Should not exist.
M1	15 (W)		

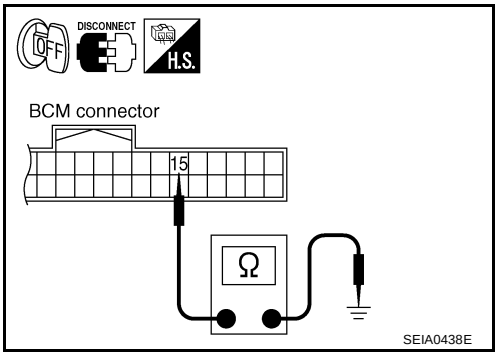

OK or NG

OK >> Replace BCM. Refer to BCS-15, "Removal and Installation of BCM" .
NG >> Repair or replace harness connector.

Inspection 4: Turn Signal Lamp Blinks When Ignition Switch Is Turned On

AES0010Q

DIAGNOSTIC PROCEDURE

1. CHECK TIRE PRESSURE WARNING CHECK SWITCH CIRCUIT

- Check continuity between BCM harness connector M1 terminal 15 (W) and ground.

Terminal			Continuity
(+)		(–)	
Connector	Terminal (Wire color)	Ground	Should not exist.
M1	15 (W)		

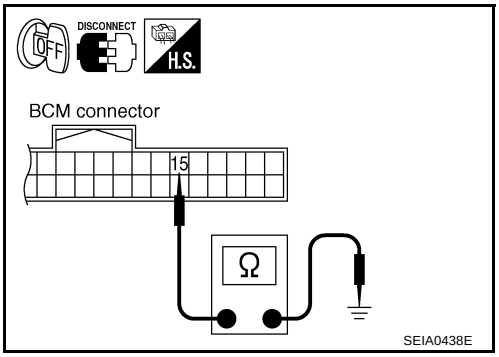

OK or NG

OK >> Check turn signal lamp operation. Refer to LT-113, "System Description" .

NG >> Repair or replace harness connector.

Inspection 5: ID Registration Can not Be Completed

AES0010R

DIAGNOSTIC PROCEDURE

1. ID REGISTRATION (ALL)

- Perform ID registration of all transmitter.

Can ID registration of all transmitters be completed?

YES >> INSPECTION END

NO >> GO TO WT-26, "TROUBLE DIAGNOSIS FOR SELF-DIAGNOSTIC ITEMS" .

REMOVAL AND INSTALLATION

PFP:00000

Transmitter

AES0010S

REMOVAL

1. Deflate tire. Unscrew transmitter retaining nut and allow transmitter to fall into tire.
2. Gently bounce tire so that transmitter falls to bottom of tire. Place on tire changing machine and break both tire beads ensuring that the transmitter remains at the bottom of the tire.

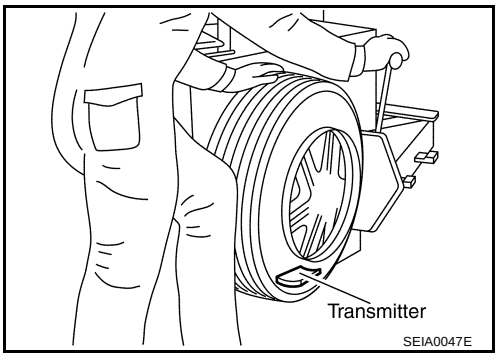

3. Turn tire so that valve hole is at bottom and bounce so that transmitter is near valve hole. Carefully lift tire onto turntable and position valve hole (and transmitter) 270 degree from mounting/dismounting head.
4. Lubricate tire well and remove first side of the tire. Reach inside the tire and remove the transmitter.

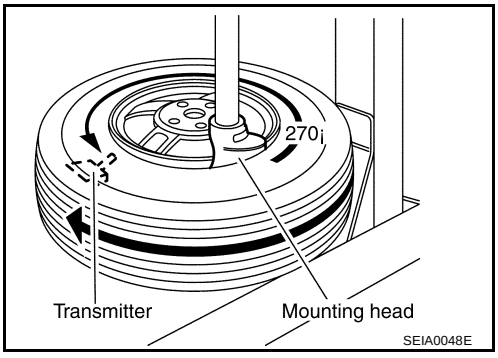

INSTALLATION

1. Put first side of tire onto rim.

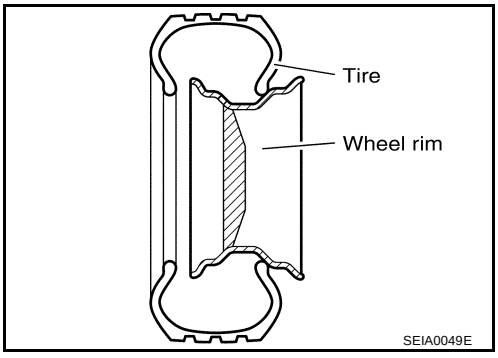

2. Mount transmitter on rim and tighten nut.

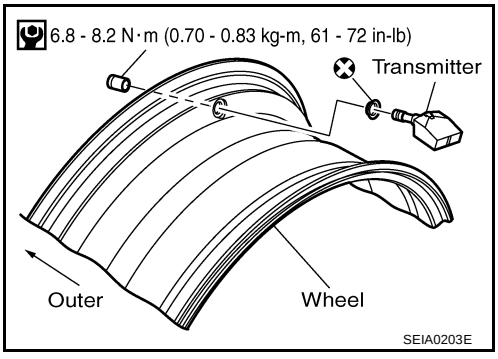

3. Place wheel on turntable of tire machine. Ensure that transmitter is 270 degree from mounting head when second side of tire is fitted.

   NOTE:
   Do not touch transmitter at mounting head.

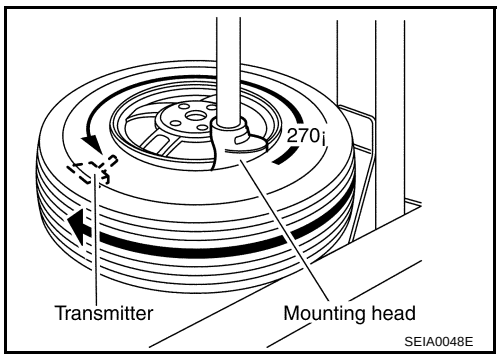

4. Lubricate tire well and fit second side of tire as normal. Ensure that tire does not rotate relative to rim.
5. Inflate tire and fit to appropriate wheel position.

SERVICE DATA AND SPECIFICATIONS (SDS)

PFP:00030

Road Wheel

AES000G5

Standard item		Allowable value	
		Aluminum	Steel for emergency use
Deflection limit	Lateral deflection	Less than 0.3 mm (0.012 in)	Less than 1.5 mm (0.059 in)
	Vertical deflection	Less than 0.3 mm (0.012 in)	Less than 1.5 mm (0.059 in)
Allowable quantity of residual unbalance	Dynamic (At rim flange)	Less than 10g (0.35 oz) (per side)	
	Static (At rim flange)	Less than 20g (0.70 oz)	

Tire

AES000G6

Unit: kPa (kg/cm^2 , psi)

Tire size	Air pressure	
	Front tire	Rear tire
P225/50R17 93V	210 (2.1, 30)	—
P235/50R17 95V	—	210 (2.1, 30)
225/45R18 91W	240 (2.4, 35)	—
245/45R18 96W	—	240 (2.4, 35)
225/40 R19 89Y	240 (2.4, 35)	—
245/40 R19 94Y	—	240 (2.4, 35)
T145/80D17	420 (4.2, 60)	